Doodle, Freehand *Design.*

design Simone Micheli
terzani.com

TERZANI
LA LUCE PENSATA



Type |
Suspension

Materials |
Brass

Finishes | Code

- Nickel 0J81S E7 C8
- Black Amethyst 0J81S M4 C8
- Gold 0J81S L6 C8
- Copper 0J81S L5 C8

Body |

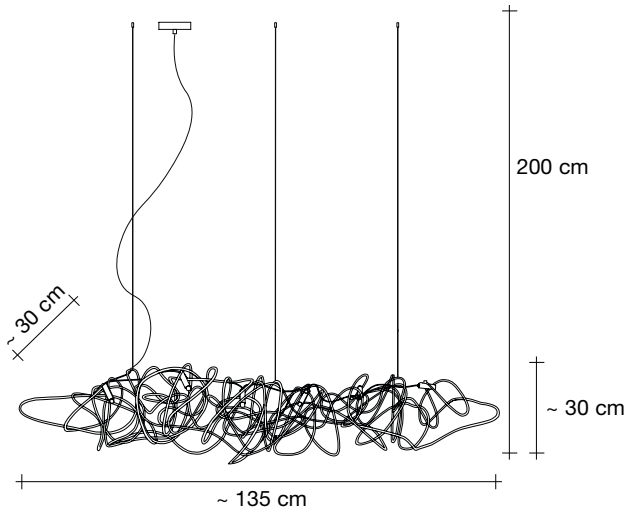



Recommended Light |

230-240V ~ 50/60Hz

LED
6 X 2W G4 12V
2700K

Dimmable with IGBT
Dali system on request

Canopy |

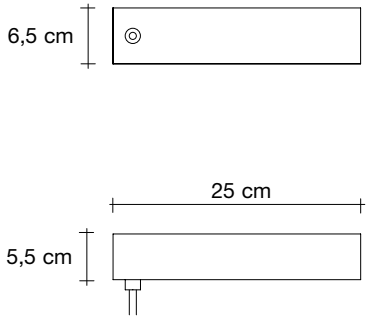

We no longer march in a straight line. Our lives are dynamic, intertwining collections of relationships, experiences and journeys. Reflecting the fluidity of our generation, designer Simone Micheli has created a new, contemporary light for Terzani Doodle. Like us, each Doodle is unique each pendant is handcrafted by artisans to resemble a randomised path. And, to give us control over the journey we want to take, each LED bulb can be placed anywhere on the light, not only reflecting the choices we make in life, but giving Doodle a special flexibility. Design Simone Micheli.

CE

Kg 10 Kg 7,5 162cm x 35cm x 35cm