G.r.a, gyrating Romantic, *rings of Light.*

design Bruno Rainaldi
terzani.com

TERZANI
LA LUCE PENSATA



Type |
Suspension

Materials |
Metal

Finishes | Code

Nickel
0N43S E7 C8 L

Gold leaf
0N43S H5 C8 L

Gold plated
0N43S L6 C8 L

Body |

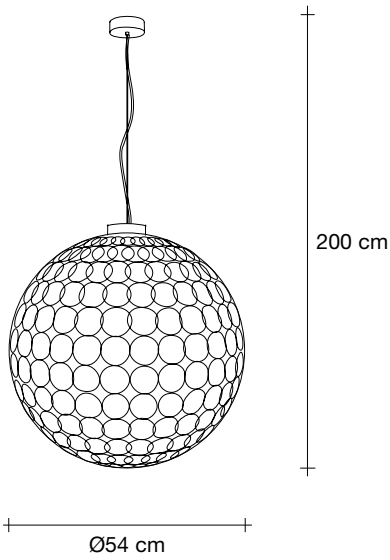



Integrated Led |

220-240V ~ 50/60Hz

COB LED integrated
18W
1640lm

Dimmable with 1-10V and PUSH
Dali system on request

Canopy |

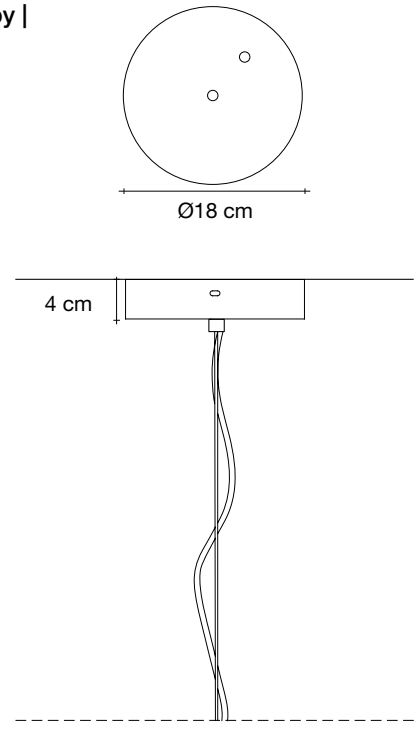

This clean, precise form is the result of hours of labor by our artisans, who meticulously weld each ring together. G.r.a. is a delicate, refined pendant whose intricate shape belies its romantic glow. Available as an oval or a sphere, and finished in nickel or gold, G.r.a. serves as an elegant, unobtrusive complement to any room. Design Bruno Rainaldi.

CE

Kg 15 Kg 8,5 62cm x 62cm x 72cm

G.r.a, gyrating Romantic, *rings of Light.*

design Bruno Rainaldi
terzani.com

TERZANI
LA LUCE PENSATA



Type |
Suspension

Materials |
Metal

Finishes | Code

Nickel
0N42S E7 C8 L

Gold leaf
0N42S H5 C8 L

Gold plated
0N42S L6 C8 L

Body |

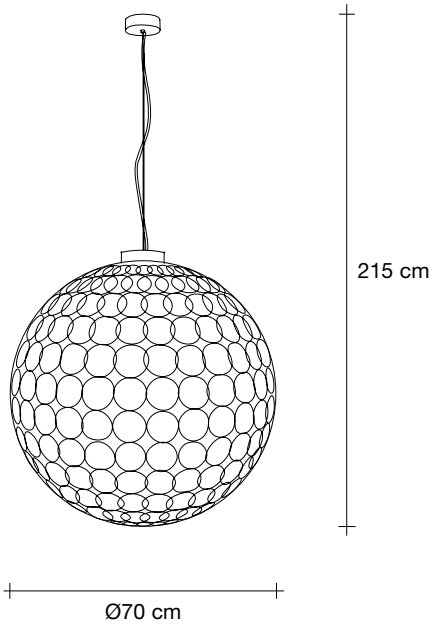



Integrated Led |

220-240V ~ 50/60Hz

COB LED integrated
18W
1640lm

Dimmable with 1-10V and PUSH
Dali system on request

Canopy |

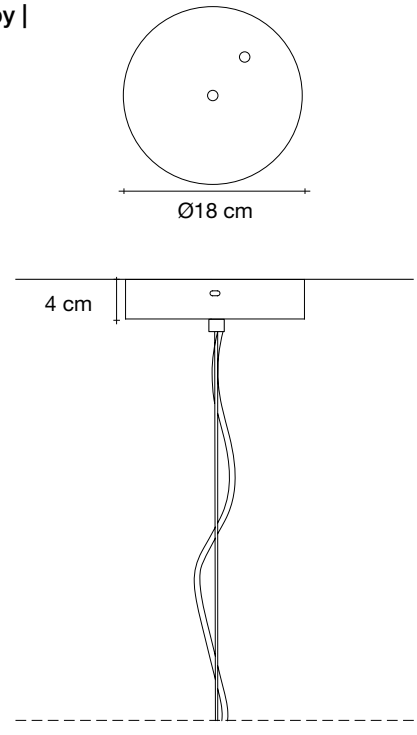

This clean, precise form is the result of hours of labor by our artisans, who meticulously weld each ring together. G.r.a. is a delicate, refined pendant whose intricate shape belies its romantic glow. Available as an oval or a sphere, and finished in nickel or gold, G.r.a. serves as an elegant, unobtrusive complement to any room. Design Bruno Rainaldi.

CE

Kg 21 Kg 10,5 77cm x 77cm x 84cm

G.r.a, gyrating Romantic, *rings of Light.*

design Bruno Rainaldi
terzani.com

TERZANI
LA LUCE PENSATA



Type |
Suspension

Materials |
Metal

Finishes | Code

Nickel
0N40S E7 C8 L

Gold
0N40S H5 C8 L

Gold plated
0N40S L6 C8 L

Body |

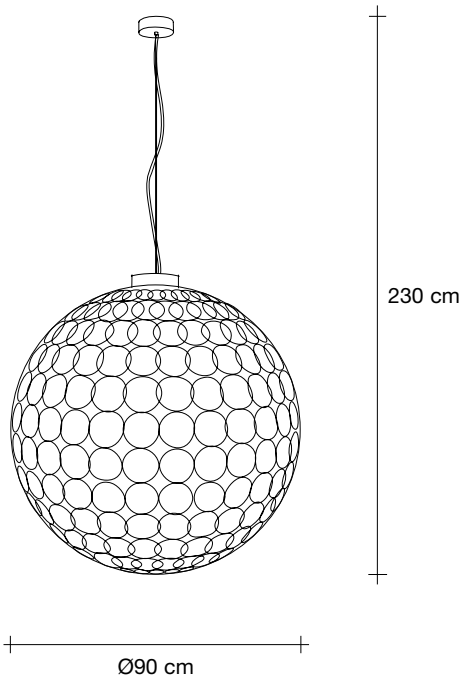



Integrated Led |

220-240V ~ 50/60Hz

COB LED integrated
18W
1640lm

Dimmable with 1-10V and PUSH
Dali system on request

Canopy |

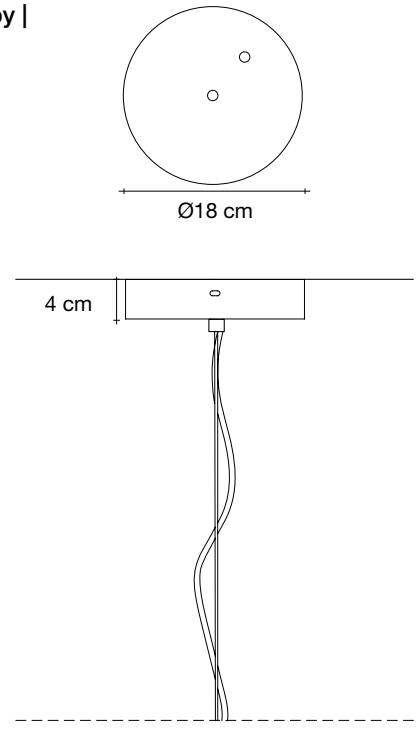

This clean, precise form is the result of hours of labor by our artisans, who meticulously weld each ring together. G.r.a. is a delicate, refined pendant whose intricate shape belies its romantic glow. Available as an oval or a sphere, and finished in nickel or gold, G.r.a. serves as an elegant, unobtrusive complement to any room. Design Bruno Rainaldi.

CE

Kg 27 Kg 17 91cm x 91cm x 102cm