moooi



Container Table Bodhi with Linoak Top

by Marcel Wanders

Nature puts down roots around the head and body of the Container Tables, growing a wooden hem around their tops and a pleated wooden skirt around their feet, accessorizing them with all the purity and warmth of solid oak.

Designer	Marcel Wanders
Year of design	2014
Material	Top: MDF table top, Linoleum top surface and solid oak rims | Cover: solid oak cover, black leather straps, brass screws, PE belt

Container table top - Linoak

The center of the Linoak top is made of linoleum, and available in the following colours. The solid oak edge is available in one of the 6 moooi stain colours.

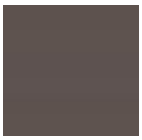
mauve


nero


pewter

Wood Stained Colours for Container Table top, Bodhi covers & Zio family


White Wash


Wenge


Natural Oil


Grey

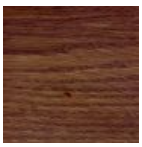
Cinnamon


Black Stained

dimensions

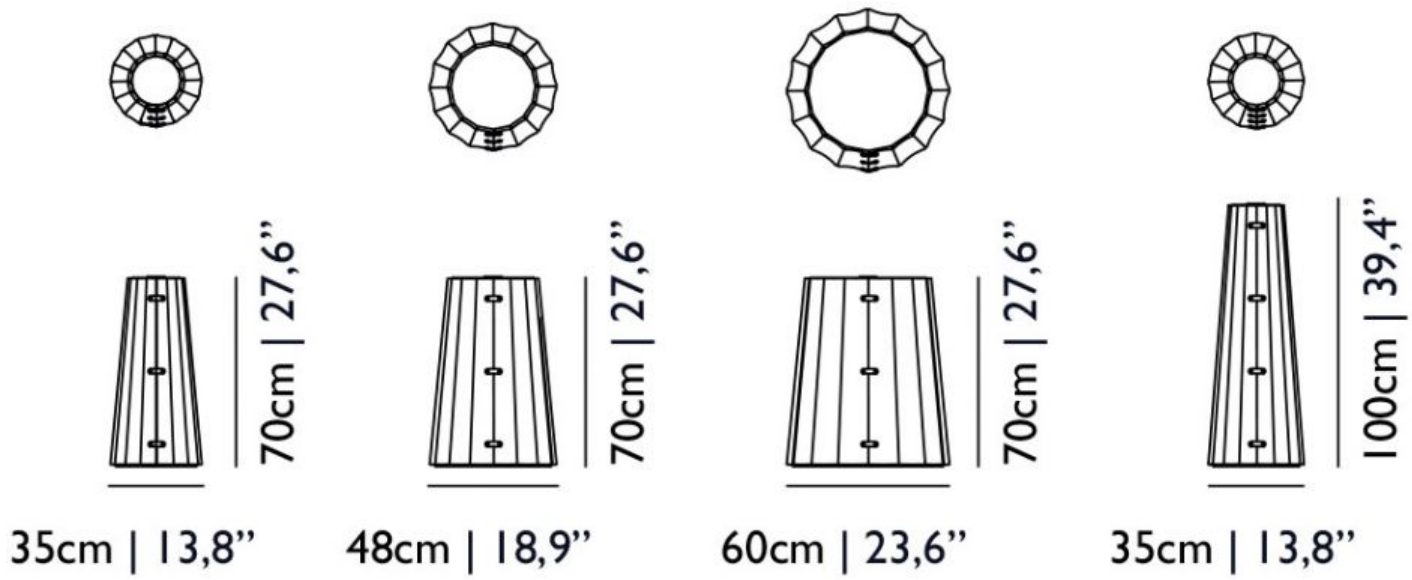
70cm | 27,6”
70cm | 27,6”
70cm | 27,6”
100cm | 39,4”
35cm | 13,8”
48cm | 18,9”
60cm | 23,6”
35cm | 13,8”

moooi

dimensions Linoak Top

