Cassina

650 AEO

Catalogue **I Contemporanei**

Year of production **1973**

Armchair with grey lacquered steel frame. Base in grey plastic material. Seat cushion with CFCfree polyurethane foam and polyester padding. Fabric or leather upholstery.

AEO was a light, comfortable chair that can be taken apart, washed and reassembled. As one of the first deconstructions of the modern armchair, it soon came to stand as a “symbol of opulence and wellbeing”. The chair was created in 1973, in keeping with Deganello’s desire to create something free from conventions with an unrestricted experimental use of new materials and possibilities.

Gallery

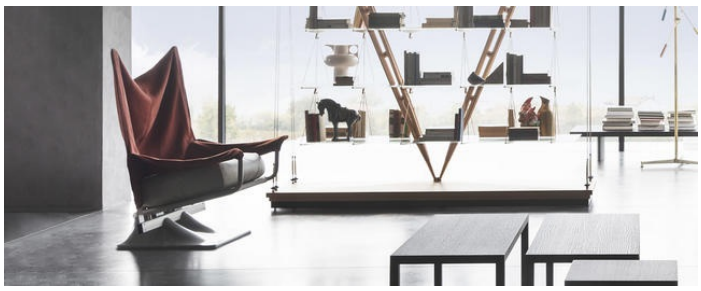



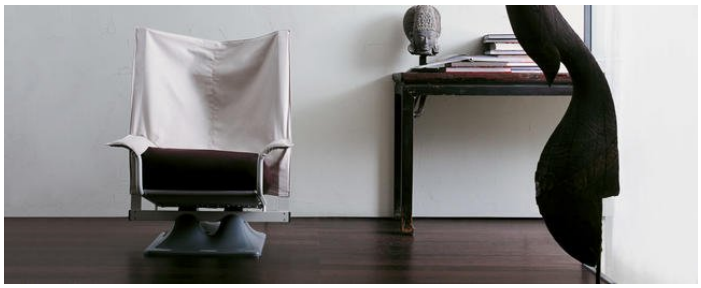



Dimensions

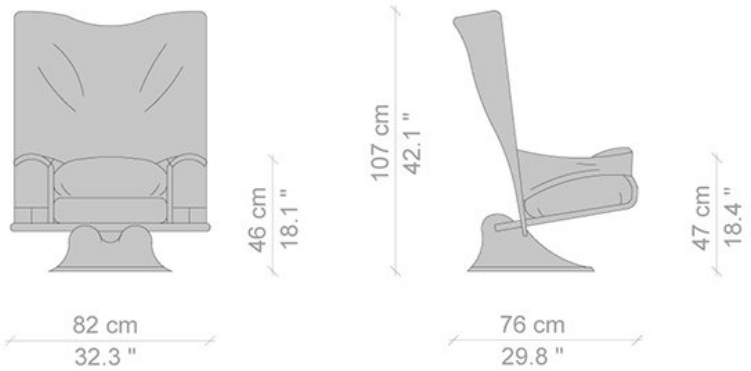

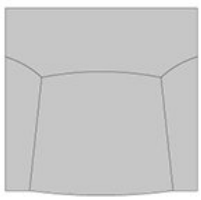

Designer



Paolo Deganello

Born at Este, Padua, in 1940, Paolo Deganello graduated in architecture at Florence in 1966, From 1963 to 1974 he was engaged in town planning for the council, of Calenzaro (Florence). In 1966 he founded the Archizoom Associates studio, together with Andrea Branzi, Gilberto Corretti and Massimo Morozzi, which closed in 1972. He continued with his private practice as architect and designer in Milan, with commissions in Italy and abroad.

Derganello lectures in various universities, and has as many theoretical irons in the fire with articles in the main specialist periodicals. Since 1991 he has been lecturer in planning at the ISIA of Florence. He takes part in exhibitions of architecture and industrial design at international level. His design projects are always highly individual, clearly in the radical mould. His AEO armchair is particularly famous among the products he has designed for Cassina.