Cassina

184 EVE

Catalogue **I Contemporanei**

Year of production **2009**

Small armchair with frame in polished or enamelled aluminium or frame in walnut or natural ashwood or stained black Upholstery in leather, with invisible stitching, fitted onto an internal frame in painted steel.

Gallery























Dimensions

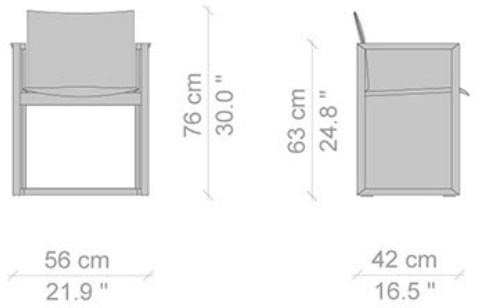
76 cm
30.0 "
63 cm
24.8 "
56 cm
21.9 "
42 cm
16.5 "



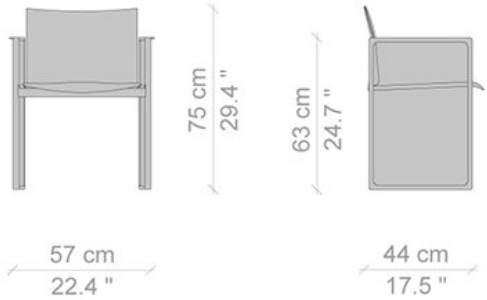
75 cm
29.4 "
63 cm
24.7 "
57 cm
22.4 "
44 cm
17.5 "



Designer



Piero Lissoni

Piero Lissoni is an architect, art director, designer (1956).

Together with Nicoletta Canesi, Piero Lissoni opens the studio Lissoni Associati in 1986. He begins collaborating as designer and Art Director with some of the best Italian and international furniture manufacturers.
In 1996 they create Graph.x to develop graphic projects.

The work of the studio embraces architecture, graphics and industrial design, with projects ranging from furniture, accessories, kitchens, bathroom and lighting fixtures to corporate identity, advertising, catalogues and packaging. Interior design projects include hotels, showrooms, trade stands, private houses, shops and yachts.

The studio currently employs over 70 people, comprising architects, designers and graphic designers and creates solutions for Alessi, Boffi, Cappellini, Cassina, Fantini, Flos/Antares, Fritz Hansen, Glas Italia, Kartell, Knoll International, Lema, Living Divani, Lualdi, Matteograssi, Olivari, Pierantonio Bonacina, Poltrona Frau, Porro, Riva 1920, Sabattini, Tecno and Thonet.
Incursions into the fashion world involve store design and showrooms for brands such as Benetton, Brosway, Gallo, Piazza Sempione, Santandrea, Serapian, in addition to showrooms and corporate identity for the American designer Elie Tahari, based in New York.

Piero Lissoni architectural projects include a private loft in Monza (2009); a villa near Como (2005); the Mamilla Hotel in Jerusalem (2009) with 210 new rooms and suites, the interior architecture of the bar & lounge areas, and the Scala restaurant, serving kosher haute cuisine; the renovation of the public areas of the Monaco & Grand Canal Hotel (2002-2004) in Venice; the Bentley Design HotelTM in Istanbul (2002); the Al Porto Design HotelTM on Zurich lake(2001); the Mitsui Garden Hotel in Tokyo (2005); the Studio M Hotel in Singapore (2010); Hotel Bellariva (2010), an historic manor house on Garda Lake; the principal suites for the Pierre Hotel New York (2010) and for the Taj Palace Hotel (2010) in Mumbai.

In addition to showrooms for Boffi, Cassina, Porro and Tecno, Piero Lissoni re-designed the headquarters of Living Divani in Anzano del Parco (2007); the headquarters for Glas (2010) and Matteograssi (2011) near Milan; the new offices of La Rinascente Group in Milan (2006); an eight-storey edifice for Benetton in Istanbul (2009).
For the Dutch multinational Stage Entertainment, Piero Lissoni renovated the historic Teatro Nazionale (2009) in Milan, today exclusively dedicated to musicals.
In collaboration with Studio Brenta Yacht Design, Piero Lissoni designed the interiors of the 27m sailing yacht Ghost (2005) owned by a New York art dealer, and in partnership with the shipyard Mondo Marine, the 50m motor yacht Tribù designed for Luciano Benetton (2007).
Graph.x has handled the corporate identity, logo and billboards for the Mostra Internazionale d'Arte Cinematografica di Venezia from the 64th edition onwards (2007-2011).

Recently inaugurated projects include the renovation of the Ferrari Club House at the Fiorano race track; a Pastry Atelier at the Filippo La Mantia restaurant inside the Majestic Hotel in Rome together with the complete renovation of the historic reception rooms (Salone Verdi and Sala Mozart) of the same hotel; apartments and private villas in Switzerland and Italy; shops and showrooms in Paris, London, Frankfurt, Milan.

Projects that are about to be inaugurated include the Conservatorium Hotel in the Museum Square area in Amsterdam; the beauty farm and hotel Mare Pineta in Milano Marittima; the Billia Grand Hotel and Casino in Saint Vincent; the interior architecture of the David Citadel Hotel in Jerusalem; the Sant'Orsola winery in Piedmont, near Alba.

In April 2010 the studio won the competition organized by the Municipal Council of Maranello, for the restoration of the piazza and the construction of a 30 metre tall panoramic tower in steel and polycarbonate, in front of the Galleria Ferrari.