Frame, Nature's, *Imprint.*

design Terzani Lab
terzani.com

TERZANI
LA LUCE PENSATA



Type |
Wall sconce

Materials |
Clear

Finishes | Code

White/Clear
0Q04A E8 A9

Coral/Clear
0Q04A H1 A9

Silver/Clear
0Q04A G7 A9

Gold/Clear
0Q04A L6 A9

Body |

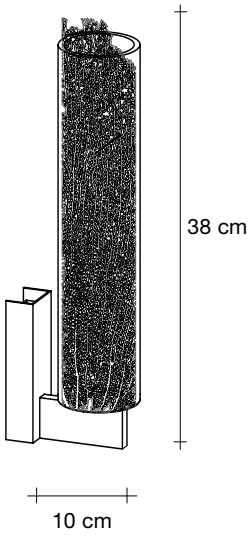



Recommended Light |

230-240V ~ 50/60Hz

LED
3,5W G9

Dimmable with
all systems

Canopy |

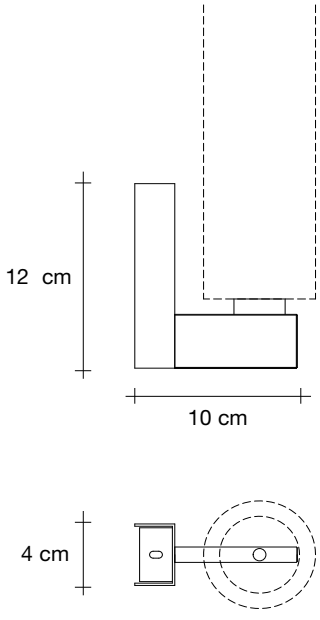

Capturing a moment in time, Frame features a metal coral leaf, enclosed inside a borosilicate glass preserving a delicate imprint of nature. Hidden inside is a single bulb which glows from within. Creating a stirring light that projects a dynamic shadow due to the permeable coral. Frame is available in white, red, gold plated or silver plated. Design Terzani Lab.

CE

Kg 2,5

Kg 1,2

49cm x 41cm x 19cm